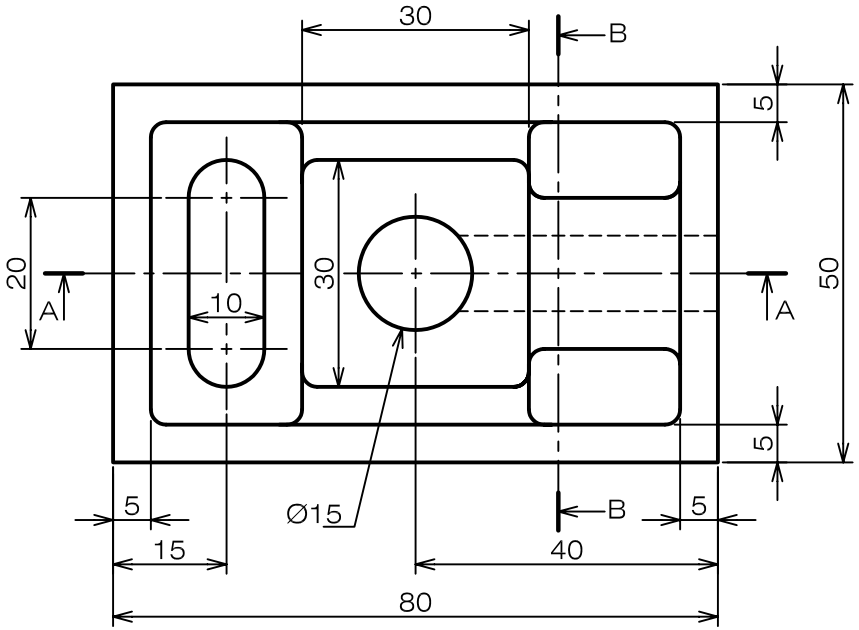

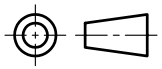

Draw the top view, and change the front and side views to sectional views as indicated.

(Problem is adapted from
"A manual of engineering Drawing for student and draftmen"
by French et al.)

NOTE :
All fillets and rounds are R2.

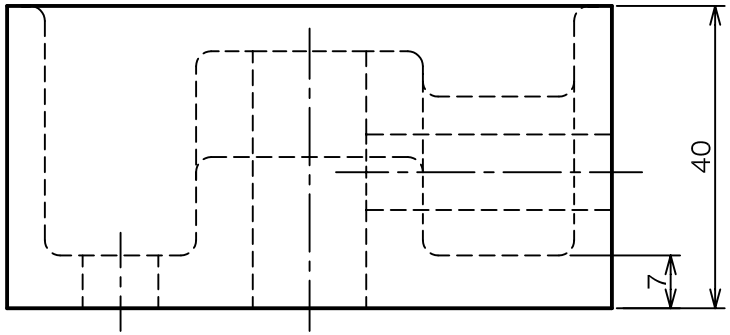

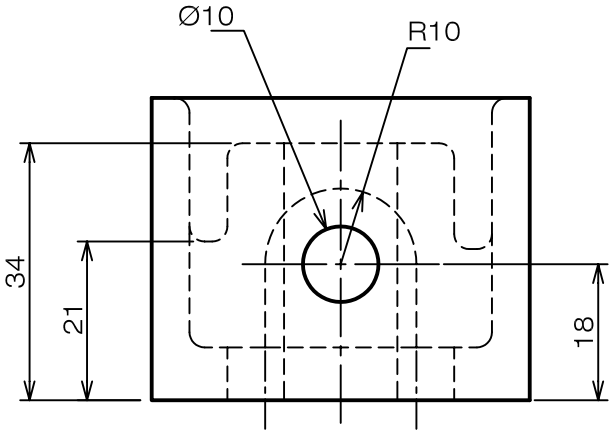

SCALE 1:1

SECTION VIEW